Technical specification

patruus 50 BG

(formerly 2G-KWK-50BG)

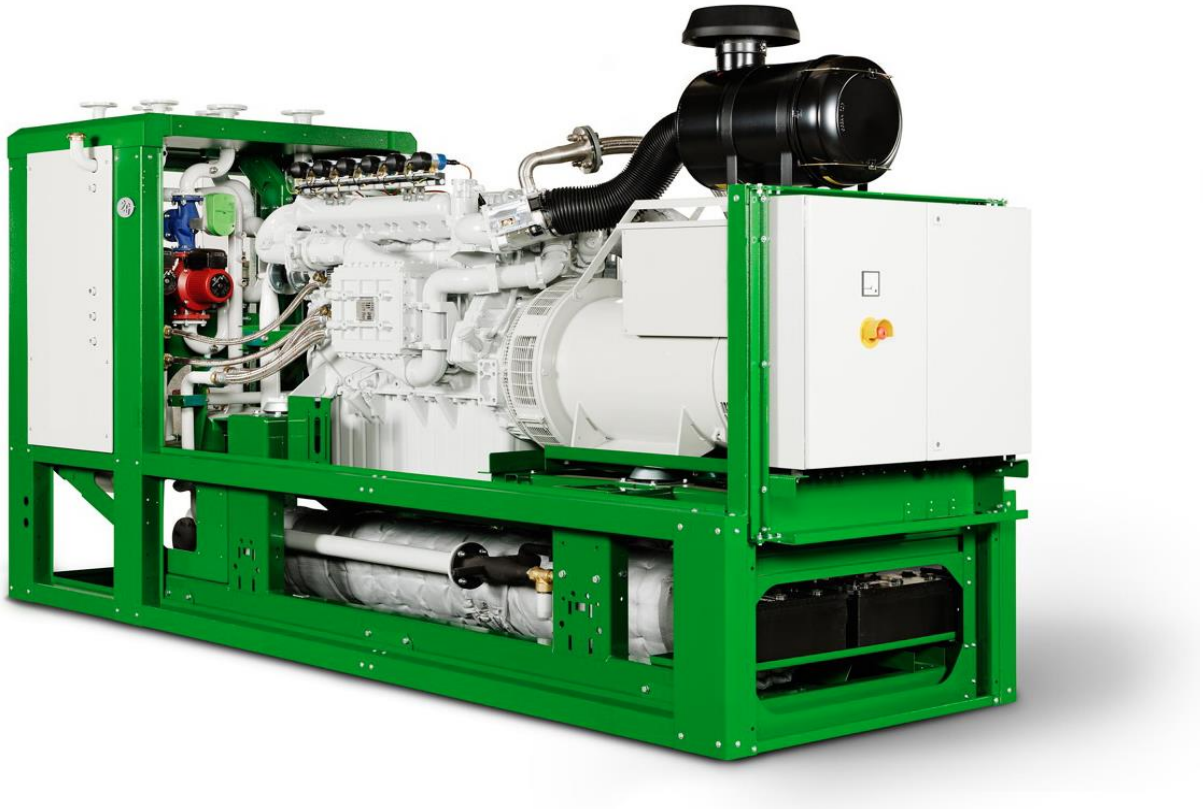

Design:

50 kW el.

480 V / 60 Hz

biogas (60% CH4, 40% CO2)

Calorific Value = 578 BTU/ft³

NOx < 1.0 g/BHP-h

Exhaust cooling to 356 °F

1. Genset	3
1.1 Engine	3
1.2 Generator (utility planning data)	4
2 Mixture composition	4
2.1 Combustion air	4
2.2 Fuel	5
3 Integrated heat extraction	5
3.1 Customer Heat Recovery Circuit	5
3.2 Engine circuit	5
3.3 Mixture cooling water circuit - low temperature (LT)	5
4. Exhaust system	6
5 Ventilation	6
6 Operating fluids	6
7 Electronics and software	6
8 Interfaces	7
8.1 Dimensions and weights	7
8.2 Mechanical Connections	8
8.3 Electrical connections / utility interface	8
8.4 Data interfaces	8
9 Technical boundary conditions	9

Subject to technical changes!

Note: Figure on cover page may differ

1. Genset

	75 %	100 %	Load
Electrical power	38	50	kW (5)
Useful thermal power	205.998	248.719	MBTU/hr (2)
Fuel cosumption	414.483	511.189	MBTU/hr (1)
Efficiency Electrical	30.9	33.4	% (1)
Efficiency Thermal	49.7	48.7	% (1), (2)
Efficiency Combined (el. + th.)	80.6	82.0	% (1), (2)

	NOx *	CO	VOC (8)	
Exh. emissions without catalytic converter	< 1.0	< 2.5	< 0.7	g/BHP-h
	< 91	< 300		ppm (4),(6)
Exh. emissions with catalytic converter	< 1.0	< 0.8	< 0.7	g/BHP-h
	< 91	< 90		ppm (4),(6)

Engine surface noise **	100	dB(A) (7)
Engine surface noise with sound enclosure (optional) ***	70	dB(A) (7)

1.1 Engine

Engine manufacturer	MAN	
Engine type	E 0834 LE 302	
Type	row	
No. of cylinders	4	
Operating method	4-stroke	
Engine displacement	4580	ccm
Bore	4.25	in
Stroke	4.92	in
RPM	1800	1/min
ISO standard power (mech.)	72	bhp
compression ratio	11,0 : 1	
average effective pressure	113.3	psi
average piston speed	24.6	ft/s
body of balance wheel	SAE 2	
Direction of rotation (based on balance wheel)	left	
tooth rim with number of teeth	143	
Engine dead weight	1091	lbs
Mixture cooling to	122	°F

* Reffered to MAN data sheet

** Total sound power level at full engine load in accordance with DIN EN ISO 3746

*** Average sound pressure level under open area conditions at distance of 1 m in accordance with DIN 45635
An increased noise load must be taken into account with fresh air intake from the installation room.

1.2 Generator (utility planning data)

Manufacturer	Leroy Somer	
Type	LSA 44.3 S3/4P	
Generator type	Synchronous, directly coupled	
Voltage regualtor (AVR)	D510C	
Rated speed	1800	1/min
Frequency	60	Hz
Effective electrical power	50	kW
Apparent electrical power (cos φ 0.8)	63	kVA
Apparent electrical power (cos φ 1.0)	50	kVA
Rated generator current (cos φ 0.8)	75	A
Rated generator current (cos φ 1.0)	60	A
Rated generator voltage (± 10 %)	480	V
Subtransient reactance X"d	7.7	%
Short-circuit current Ik"3	1.63	kA
Power factor cos φ (lagging / leading)	0.8 / 0.95	
Generator circuit breaker	100	A
Additional section switch (VDE-AR-N 4105)	100	A
Efficiency (full load) at Cos φ = 1	93.2	%
Mass moment of inertia	19.64	lb · ft²
Ambient air temperature	104	°F
Stator circuit	star	
Protection class	IP 23	
Generator weight	664	lbs
Compensation	not available	
Engine startup	not available	

2 Mixture composition

2.1 Combustion air

Combustion air mass flow	594	lbs/hr
Combustion air volume flow (25 °C, 1013 mbar)	134	SCFM

2.2 Fuel

Fuel requirements in accordance with 'TA-004 Gas'		
Reference methane number - minimum methane number	140 / 80	
Combustible mass flow	67.4	lbs/hr (1)
Combustible volume flow	14.7	SCFM (6),(1)
Gas pressure at rated load min. *	0.435	psig
Gas flow pressure at rated load max. *	1.015	psig
Gas regulation line safety pressure	7.252	psig

* At the inlet to the gas regulation line

3 Integrated heat extraction

3.1 Customer Heat Recovery Circuit

Heating water requirements in accordance with 'TA-002 Heating circuit'		
Heating water volume flow (at Δt = 15 K)	18.4	gpm
Internal pressure loss in heating circuit (approx.) *	4.35	psig
Total Head ca. *	26.80	ft
Heating water return temperature (max)	158	°F
Heating water flow temperature (max) **	194	°F
Safety valve	87.02	psi

3.2 Engine circuit

Coolant requirements in accordance with 'TA-001 Coolant'		
Jacket Water Heat	164.655	MBTU/hr
Exhaust Gas Heat up to 356°F	83.044	MBTU/hr
Engine inlet temperature (min.)	176	°F
Engine outlet temperature (max.)	190	°F
Differential inlet / outlet (max.)	10.8	°F
Jacket water flow (min.)	35.4	gpm
Jacket water flow (max.)	35.8	gpm
Operating pressure (max.)	29.0	psi
Safety valve	43.5	psi
Safety temperature limiter	230	°F
Intercooler heat high temperature circuit	1.020	MBTU/hr
Intercooler inlet high water temperature (max.)	180	°F
Intercooler coolant flow high temperatue circuit (min.)	0.4	gpm

3.3 Mixture cooling water circuit - low temperature (LT)

Coolant requirements in accordance with 'TA-001 Coolant'		
Intercooler heat low temperature circuit	3.713	MBTU/hr
Intercooler inlet low water temperature (max.)	108	°F
Intercooler outlet low water temperature (max.)	113	°F
Intercooler coolant flow low temperature circuit (min.)	1.6	gpm
Safety valve	44	psi

* Up to / from module interface

** Heating water supply temperature in partial load operation < 90°C

4. Exhaust system

Exhaust gas temperature after turbo charger	819	°F (3)
Exhaust temperature after exhaust heat exchanger	356	°F
exhaust gas volume flow wet	136	SCFM (6)
exhaust gas volume flow dry	120	SCFM (6)
exhaust gas mass flow wet	661	lbs/hr
exhaust gas mass flow dry	608	lbs/hr
Exhaust back pressure downstream of turbine max.	0.73	psig
Pressure reserve approx. (with catalytic converter) *	0.54 (0.48)	psig
Exhaust outlet noise **	132	dB (7)

5 Ventilation

Radiation heat of engine and generator (approx.)	76.397	MBTU/hr
Supply air volume flow min. (at Δt = 15 K)	2792	SCFM

6 Operating fluids

Lubricating oil approvals, see 'TA-003 Lubricating oil'		
Lubrication oil consumption (max.)	2.00	g/kWh
Filling capacity lubricant (max.)	3.43	gallons
Lubricating oil filling tank fill capacity ***	9.25	gallons
Lubricating oil volume extension tank (optional)	18.49	gallons
Coolant approvals, see 'TA-001 Coolant'		

7 Electronics and software

Generator Protection Relay	Deif GPC 3 | optional redundant Relay SEL 700GT	
Touchscreen display	10	"
Protection class Control cabinet	Type 12	
Protection class Power switch cabinet	Type 1	
Switch cabinet environmental temperature	32 - 95	°F
Switch cabinet relative air humidity (max.)	65	%

* From module interface (exhaust heat exchanger / catalytic converter in standard version and new condition)

** Total sound power level at full engine load in accordance with DIN 45635-11 Annex A

*** Filling tank omitted with installation of a lubricating oil volume auxiliary tank

8 Interfaces

8.1 Dimensions and weights

(Figures may differ)

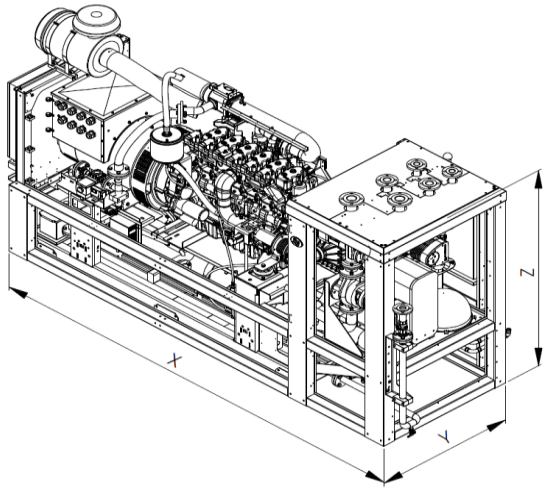

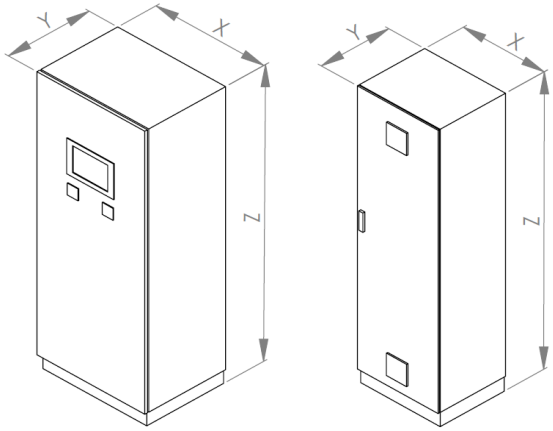

Length Module	X	108.07	in
Width Module	Y	46.06	in
Height Module	Z	68.90	in
Weight Module		4916	lbs
Weight Module with sound enclosure (optional)		6019	lbs
Powder-coated CHP frame		RAL 6002	

Width Control cabinet	X	39.37	in
Depth Control cabinet	Y	23.62	in
Height Control cabinet	Z	82.68	in
Weight Control cabinet		441	lbs
Control cabinet powder coated		RAL 7035	

Width Power switch cabinet	X	23.62	in
Depth Power switch cabinet	Y	19.69	in
Height Power switch cabinet	Z	78.74	in
Weight Power switch cabinet		331	lbs
Power switch cabinet powder coated		RAL 7035	

8.2 Mechanical Connections

Interface Gas	25 / 10	DN / PN
Interface Exhaust	100 / 10	DN / PN
Interface Heating circuit	32 / 16	DN / PN
Interface Emergency cooling circuit	40 / 16	DN / PN
Interface Mixture cooling circuit LT	25 / 16	DN / PN

8.3 Electrical connections / utility interface

Grid connection with pre-fuse (customer-provided)	480 V / 60 Hz	
Grid system	Y	
Short-circuit proof Icc (max.)	50	kA

8.4 Data interfaces

Remote maintenance access (optional) *	DSL / UMTS (SIM)	
Interfaces / Data interfaces (optional):	-	Profibus
	-	Profinet
	-	Modbus RTU
	-	Modbus TCP
	-	Ethernet IP
	-	Hardware contacts

* Access for remote maintenance must be provided by the customer

9 Technical boundary conditions

Unless otherwise specified, all data is based on full engine load with the respective indicated media temperatures and subject to technical improvements. The generator output measured at the generator terminals serves as the basis for the delivered electrical power. All power and efficiency specifications are gross specifications. The fuel gas quality must conform to the specifications of 'TA-004 Gas'. The operating fluids and plant system layout must conform to the 'Technical instructions' of 2G.

(1) Performance conditions in accordance with DIN ISO 3046. Tolerance for specific fuel use amounts to + 5% of nominal performance. Efficiency specifications are based on an engine in new condition. An abatement in efficiency over the service life is reduced with observance of the maintenance requirements.

(2) The tolerance for usable heat output is +/- 8 % under normal load.

(3) The tolerance for the exhaust temperature is +/- 8 %.

(4) Corresponding to a residual oxygen concentration in the exhaust of 15 %.

(5) Electrical generator terminal power at cos φ = 1.0

(6) Volume specifications for normal status:

Pressure	14.69	psig
Temperature	32	°F

(7) Standard deviation of reproducibility 4 dB in accordance with DIN EN ISO 3746

(8) Assumed gas composition (VOC calculated as NMHC):
CH4=60 %, CO2=40 %

Power specifications in this document relate to standard reference conditions.

Standard reference conditions in accordance with DIN ISO 3046-1:

Air pressure	14.50	psig
Air temperature	77	°F
Relative air humidity	30	%

Power reduction

Power reduction due to installation at altitude > 958ft a.s.l. and/or air suction temperature > 77°F shall be determined specifically for each project according "TI-049 Load reduction".

Technical specification

patruus 64 BG

(formerly 2G-KWK-64 BG)

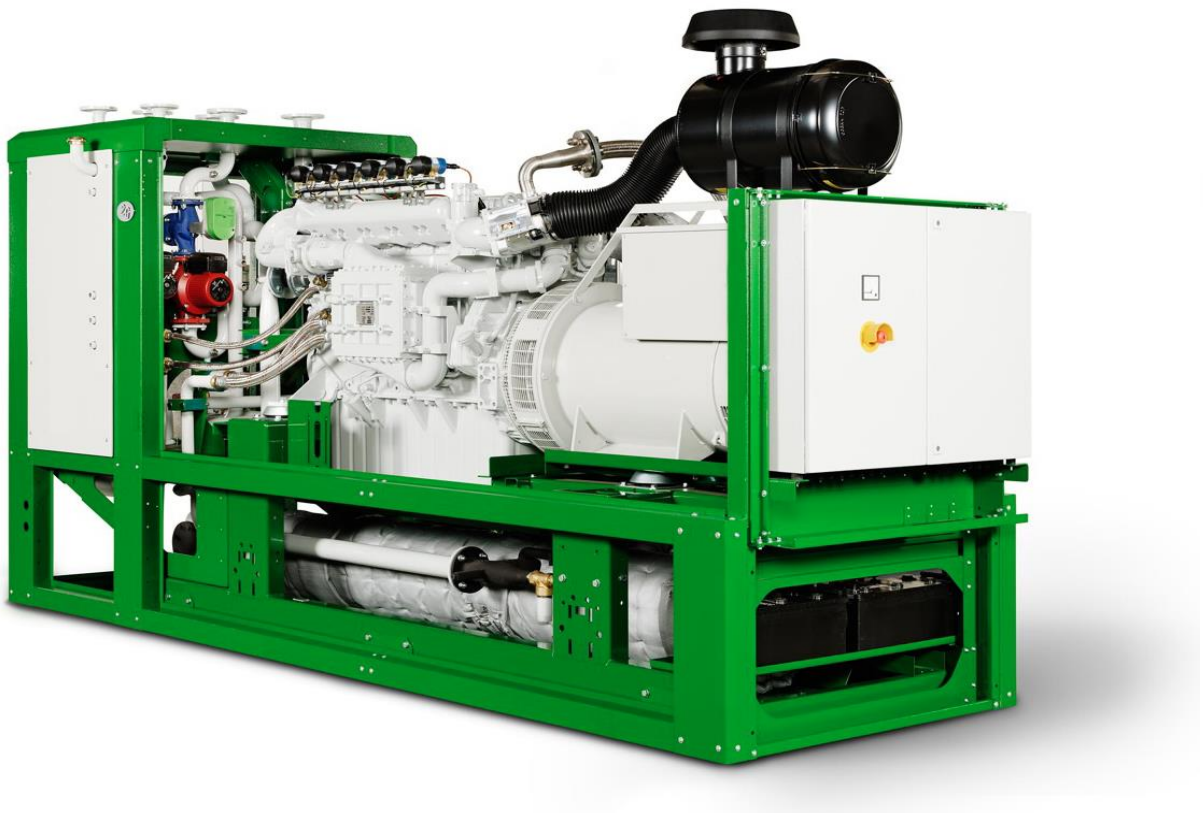

Design:

64 kW el.

480 V / 60 Hz

biogas (60% CH4, 40% CO2)

Calorific Value = 578 BTU/ft³

NOx < 1.0 g/BHP-h

Exhaust cooling to 356 °F

1. Genset	3
1.1 Engine	3
1.2 Generator (utility planning data)	4
2 Mixture composition	4
2.1 Combustion air	4
2.2 Fuel	5
3 Integrated heat extraction	5
3.1 Customer Heat Recovery Circuit	5
3.2 Engine circuit	5
3.3 Mixture cooling water circuit - low temperature (LT)	5
4. Exhaust system	6
5 Ventilation	6
6 Operating fluids	6
7 Electronics and software	6
8 Interfaces	7
8.1 Dimensions and weights	7
8.2 Mechanical Connections	8
8.3 Electrical connections / utility interface	8
8.4 Data interfaces	8
9 Technical boundary conditions	9

Subject to technical changes!

Note: Figure on cover page may differ

1. Genset

	50 %	75 %	100 %	Load
Electrical power	32	48	64	kW (5)
Useful thermal power	191.855	241.593	305.525	MBTU/hr (2)
Fuel cosumption	376.925	496.084	625.636	MBTU/hr (1)
Efficiency Electrical	29.0	33.0	34.9	% (1)
Efficiency Thermal	50.9	48.7	48.8	% (1), (2)
Efficiency Combined (el. + th.)	79.9	81.7	83.7	% (1), (2)

	NOx *	CO	VOC (8)	
Exh. emissions without catalytic converter	< 1.0	< 2.4	< 0.7	g/BHP-h
	< 91	< 300		ppm (4),(6)
Exh. emissions with catalytic converter	< 1.0	< 0.7	< 0.7	g/BHP-h
	< 91	< 90		ppm (4),(6)

Engine surface noise **	100	dB(A) (7)
Engine surface noise with sound enclosure (optional) ***	70	dB(A) (7)

1.1 Engine

Engine manufacturer	MAN	
Engine type	E 0834 LE 302	
Type	row	
No. of cylinders	4	
Operating method	4-stroke	
Engine displacement	4580	ccm
Bore	4.25	in
Stroke	4.92	in
RPM	1800	1/min
ISO standard power (mech.)	91	bhp
compression ratio	11,0 : 1	
average effective pressure	144.0	psi
average piston speed	24.6	ft/s
body of balance wheel	SAE 2	
Direction of rotation (based on balance wheel)	left	
tooth rim with number of teeth	143	
Engine dead weight	1091	lbs
Mixture cooling to	122	°F

* Reffered to MAN data sheet

** Total sound power level at full engine load in accordance with DIN EN ISO 3746

*** Average sound pressure level under open area conditions at distance of 1 m in accordance with DIN 45635
An increased noise load must be taken into account with fresh air intake from the installation room.

1.2 Generator (utility planning data)

Manufacturer	Leroy Somer	
Type	LSA 44.3 S3/4P	
Generator type	Synchronous, directly coupled	
Voltage regualtor (AVR)	D510C	
Rated speed	1800	1/min
Frequency	60	Hz
Effective electrical power	64	kW
Apparent electrical power (cos φ 0.8)	80	kVA
Apparent electrical power (cos φ 1.0)	64	kVA
Rated generator current (cos φ 0.8)	96	A
Rated generator current (cos φ 1.0)	77	A
Rated generator voltage (± 10 %)	480	V
Subtransient reactance X"d	9.9	%
Short-circuit current Ik"3	1.63	kA
Power factor cos φ (lagging / leading)	0.8 / 0.95	
Generator circuit breaker	160	A
Additional section switch (VDE-AR-N 4105)	160	A
Efficiency (full load) at Cos φ = 1	93.8	%
Mass moment of inertia	19.64	lb · ft²
Ambient air temperature	104	°F
Stator circuit	star	
Protection class	IP 23	
Generator weight	664	lbs
Compensation	not available	
Engine startup	not available	

2 Mixture composition

2.1 Combustion air

Combustion air mass flow	727	lbs/hr
Combustion air volume flow (25 °C, 1013 mbar)	164	SCFM

2.2 Fuel

Fuel requirements in accordance with 'TA-004 Gas'		
Reference methane number - minimum methane number	140 / 80	
Combustible mass flow	82.5	lbs/hr (1)
Combustible volume flow	18.0	SCFM (6),(1)
Gas pressure at rated load min. *	0.435	psig
Gas flow pressure at rated load max. *	1.015	psig
Gas regulation line safety pressure	7.252	psig

* At the inlet to the gas regulation line

3 Integrated heat extraction

3.1 Customer Heat Recovery Circuit

Heating water requirements in accordance with 'TA-002 Heating circuit'		
Heating water volume flow (at Δt = 15 K)	22.6	gpm
Internal pressure loss in heating circuit (approx.) *	4.35	psig
Total Head ca. *	26.80	ft
Heating water return temperature (max)	158	°F
Heating water flow temperature (max) **	194	°F
Safety valve	87.02	psi

3.2 Engine circuit

Coolant requirements in accordance with 'TA-001 Coolant'		
Jacket Water Heat	188.037	MBTU/hr
Exhaust Gas Heat up to 356°F	106.897	MBTU/hr
Engine inlet temperature (min.)	176	°F
Engine outlet temperature (max.)	190	°F
Differential inlet / outlet (max.)	10.8	°F
Jacket water flow (min.)	40.4	gpm
Jacket water flow (max.)	45.0	gpm
Operating pressure (max.)	29.0	psi
Safety valve	43.5	psi
Safety temperature limiter	230	°F
Intercooler heat high temperature circuit	10.592	MBTU/hr
Intercooler inlet high water temperature (max.)	180	°F
Intercooler coolant flow high temperatue circuit (min.)	4.6	gpm

3.3 Mixture cooling water circuit - low temperature (LT)

Coolant requirements in accordance with 'TA-001 Coolant'		
Intercooler heat low temperature circuit	6.882	MBTU/hr
Intercooler inlet low water temperature (max.)	108	°F
Intercooler outlet low water temperature (max.)	113	°F
Intercooler coolant flow low temperature circuit (min.)	3.0	gpm
Safety valve	44	psi

* Up to / from module interface

** Heating water supply temperature in partial load operation < 90°C

4. Exhaust system

Exhaust gas temperature after turbo charger	842	°F (3)
Exhaust temperature after exhaust heat exchanger	356	°F
exhaust gas volume flow wet	167	SCFM (6)
exhaust gas volume flow dry	146	SCFM (6)
exhaust gas mass flow wet	810	lbs/hr
exhaust gas mass flow dry	744	lbs/hr
Exhaust back pressure downstream of turbine max.	0.73	psig
Pressure reserve approx. (with catalytic converter) *	0.52 (0.45)	psig
Exhaust outlet noise **	132	dB (7)

5 Ventilation

Radiation heat of engine and generator (approx.)	83.375	MBTU/hr
Supply air volume flow min. (at Δt = 15 K)	3065	SCFM

6 Operating fluids

Lubricating oil approvals, see 'TA-003 Lubricating oil'		
Lubrication oil consumption (max.)	1.56	g/kWh
Filling capacity lubricant (max.)	3.43	gallons
Lubricating oil filling tank fill capacity ***	9.25	gallons
Lubricating oil volume extension tank (optional)	18.49	gallons
Coolant approvals, see 'TA-001 Coolant'		

7 Electronics and software

Generator Protection Relay	Deif GPC 3 | optional redundant Relay SEL 700GT	
Touchscreen display	10	"
Protection class Control cabinet	Type 12	
Protection class Power switch cabinet	Type 1	
Switch cabinet environmental temperature	32 - 95	°F
Switch cabinet relative air humidity (max.)	65	%

* From module interface (exhaust heat exchanger / catalytic converter in standard version and new condition)

** Total sound power level at full engine load in accordance with DIN 45635-11 Annex A

*** Filling tank omitted with installation of a lubricating oil volume auxiliary tank

8 Interfaces

8.1 Dimensions and weights

(Figures may differ)

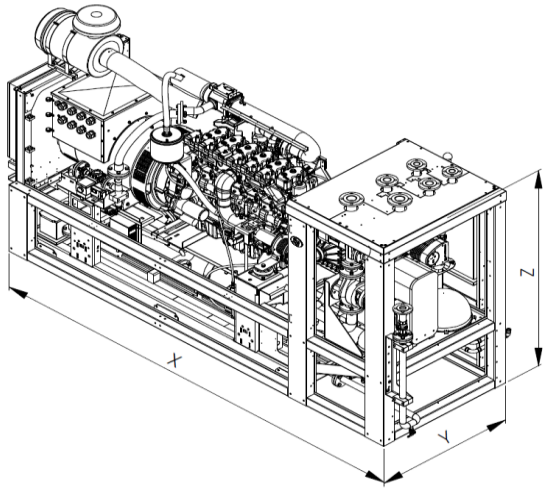

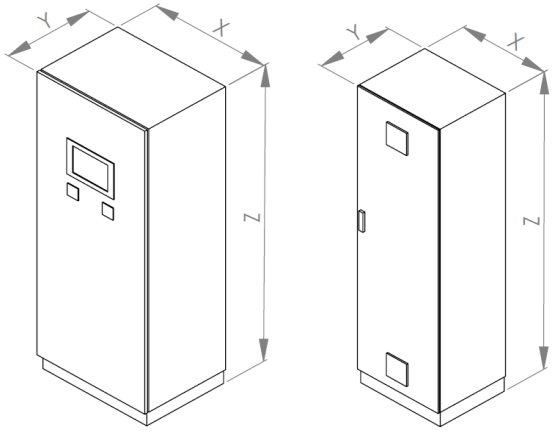

Length Module	X	108.07	in
Width Module	Y	46.06	in
Height Module	Z	68.90	in
Weight Module		4916	lbs
Weight Module with sound enclosure (optional)		6019	lbs
Powder-coated CHP frame		RAL 6002	

Width Control cabinet	X	39.37	in
Depth Control cabinet	Y	23.62	in
Height Control cabinet	Z	82.68	in
Weight Control cabinet		441	lbs
Control cabinet powder coated		RAL 7035	

Width Power switch cabinet	X	23.62	in
Depth Power switch cabinet	Y	19.69	in
Height Power switch cabinet	Z	78.74	in
Weight Power switch cabinet		331	lbs
Power switch cabinet powder coated		RAL 7035	

8.2 Mechanical Connections

Interface Gas	25 / 10	DN / PN
Interface Exhaust	100 / 10	DN / PN
Interface Heating circuit	32 / 16	DN / PN
Interface Emergency cooling circuit	40 / 16	DN / PN
Interface Mixture cooling circuit LT	25 / 16	DN / PN

8.3 Electrical connections / utility interface

Grid connection with pre-fuse (customer-provided)	480 V / 60 Hz	
Grid system	Y	
Short-circuit proof Icc (max.)	50	kA

8.4 Data interfaces

Remote maintenance access (optional) *	DSL / UMTS (SIM)	
Interfaces / Data interfaces (optional):	-	Profibus
	-	Profinet
	-	Modbus RTU
	-	Modbus TCP
	-	Ethernet IP
	-	Hardware contacts

* Access for remote maintenance must be provided by the customer

9 Technical boundary conditions

Unless otherwise specified, all data is based on full engine load with the respective indicated media temperatures and subject to technical improvements. The generator output measured at the generator terminals serves as the basis for the delivered electrical power. All power and efficiency specifications are gross specifications. The fuel gas quality must conform to the specifications of 'TA-004 Gas'. The operating fluids and plant system layout must conform to the 'Technical instructions' of 2G.

(1) Performance conditions in accordance with DIN ISO 3046. Tolerance for specific fuel use amounts to + 5% of nominal performance. Efficiency specifications are based on an engine in new condition. An abatement in efficiency over the service life is reduced with observance of the maintenance requirements.

(2) The tolerance for usable heat output is +/- 8 % under normal load.

(3) The tolerance for the exhaust temperature is +/- 8 %.

(4) Corresponding to a residual oxygen concentration in the exhaust of 15 %.

(5) Electrical generator terminal power at cos φ = 1.0

(6) Volume specifications for normal status:

Pressure	14.69	psig
Temperature	32	°F

(7) Standard deviation of reproducibility 4 dB in accordance with DIN EN ISO 3746

(8) Assumed gas composition (VOC calculated as NMHC):
CH4=60 %, CO2=40 %

Power specifications in this document relate to standard reference conditions.

Standard reference conditions in accordance with DIN ISO 3046-1:

Air pressure	14.50	psig
Air temperature	77	°F
Relative air humidity	30	%

Power reduction

Power reduction due to installation at altitude > 958ft a.s.l. and/or air suction temperature > 77°F shall be determined specifically for each project according "TI-049 Load reduction".

Technical specification

patruus 100 BG

(formerly 2G-KWK-100 BG)

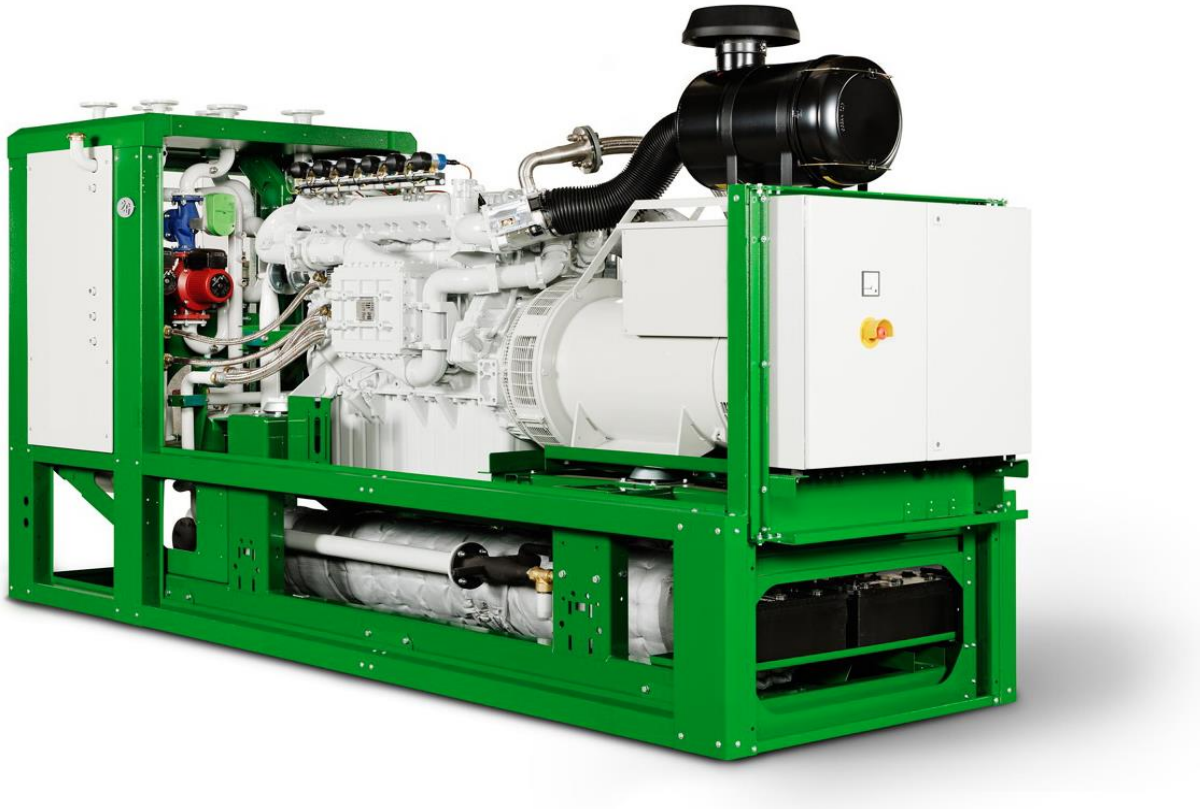

Design:

100 kW el.

480 V / 60 Hz

biogas (60% CH4, 40% CO2)

Calorific Value = 578 BTU/ft³

NOx < 1.0 g/BHP-h

Exhaust cooling to 356 °F

1. Genset	3
1.1 Engine	3
1.2 Generator (utility planning data)	4
2 Mixture composition	4
2.1 Combustion air	4
2.2 Fuel	5
3 Integrated heat extraction	5
3.1 Customer Heat Recovery Circuit	5
3.2 Engine circuit	5
3.3 Mixture cooling water circuit - low temperature (LT)	5
4. Exhaust system	6
5 Ventilation	6
6 Operating fluids	6
7 Electronics and software	6
8 Interfaces	7
8.1 Dimensions and weights	7
8.2 Mechanical Connections	8
8.3 Electrical connections / utility interface	8
8.4 Data interfaces	8
9 Technical boundary conditions	9

Subject to technical changes!

Note: Figure on cover page may differ

1. Genset

	50 %	75 %	100 %	Load
Electrical power	50	75	100	kW (5)
Useful thermal power	244.396	344.556	464.098	MBTU/hr (2)
Fuel cosumption	519.992	722.340	932.486	MBTU/hr (1)
Efficiency Electrical	32.8	35.4	36.6	% (1)
Efficiency Thermal	47.0	47.7	49.8	% (1), (2)
Efficiency Combined (el. + th.)	79.8	83.1	86.4	% (1), (2)

	NOx *	CO	VOC (8)	
Exh. emissions without catalytic converter	< 1.0	< 2.4	< 0.7	g/BHP-h
	< 91	< 300		ppm (4),(6)
Exh. emissions with catalytic converter	< 1.0	< 0.7	< 0.7	g/BHP-h
	< 91	< 90		ppm (4),(6)

Engine surface noise **	103	dB(A) (7)
Engine surface noise with sound enclosure (optional) ***	70	dB(A) (7)

1.1 Engine

Engine manufacturer	MAN	
Engine type	E 0836 LE 202	
Type	row	
No. of cylinders	6	
Operating method	4-stroke	
Engine displacement	6870	ccm
Bore	4.25	in
Stroke	4.92	in
RPM	1800	1/min
ISO standard power (mech.)	141	bhp
compression ratio	11,0 : 1	
average effective pressure	148.3	psi
average piston speed	24.6	ft/s
body of balance wheel	SAE 2	
Direction of rotation (based on balance wheel)	left	
tooth rim with number of teeth	143	
Engine dead weight	1334	lbs
Mixture cooling to	122	°F

* Reffered to MAN data sheet

** Total sound power level at full engine load in accordance with DIN EN ISO 3746

*** Average sound pressure level under open area conditions at distance of 1 m in accordance with DIN 45635
An increased noise load must be taken into account with fresh air intake from the installation room.

1.2 Generator (utility planning data)

Manufacturer	Leroy Somer	
Type	LSA 44.3 L10/4P	
Generator type	Synchronous, directly coupled	
Voltage regualtor (AVR)	D510C	
Rated speed	1800	1/min
Frequency	60	Hz
Effective electrical power	100	kW
Apparent electrical power (cos φ 0.8)	125	kVA
Apparent electrical power (cos φ 1.0)	100	kVA
Rated generator current (cos φ 0.8)	150	A
Rated generator current (cos φ 1.0)	120	A
Rated generator voltage (± 10 %)	480	V
Subtransient reactance X"d	10.2	%
Short-circuit current Ik"3	2.46	kA
Power factor cos φ (lagging / leading)	0.8 / 0.95	
Generator circuit breaker	250	A
Additional section switch (VDE-AR-N 4105)	250	A
Efficiency (full load) at Cos φ = 1	94.9	%
Mass moment of inertia	32.04	lb · ft²
Ambient air temperature	104	°F
Stator circuit	star	
Protection class	IP 23	
Generator weight	968	lbs
Compensation	not available	
Engine startup	not available	

2 Mixture composition

2.1 Combustion air

Combustion air mass flow	1046	lbs/hr
Combustion air volume flow (25 °C, 1013 mbar)	236	SCFM

2.2 Fuel

Fuel requirements in accordance with 'TA-004 Gas'		
Reference methane number - minimum methane number	140 / 80	
Combustible mass flow	123.0	lbs/hr (1)
Combustible volume flow	26.9	SCFM (6),(1)
Gas pressure at rated load min. *	0.435	psig
Gas flow pressure at rated load max. *	1.015	psig
Gas regulation line safety pressure	7.252	psig

* At the inlet to the gas regulation line

3 Integrated heat extraction

3.1 Customer Heat Recovery Circuit

Heating water requirements in accordance with 'TA-002 Heating circuit'		
Heating water volume flow (at Δt = 15 K)	34.3	gpm
Internal pressure loss in heating circuit (approx.) *	4.35	psig
Total Head ca. *	20.10	ft
Heating water return temperature (max)	158	°F
Heating water flow temperature (max) **	194	°F
Safety valve	87.02	psi

3.2 Engine circuit

Coolant requirements in accordance with 'TA-001 Coolant'		
Jacket Water Heat	311.982	MBTU/hr
Exhaust Gas Heat up to 356°F	124.569	MBTU/hr
Engine inlet temperature (min.)	176	°F
Engine outlet temperature (max.)	190	°F
Differential inlet / outlet (max.)	10.8	°F
Jacket water flow (min.)	67.1	gpm
Jacket water flow (max.)	78.9	gpm
Operating pressure (max.)	29.0	psi
Safety valve	43.5	psi
Safety temperature limiter	230	°F
Intercooler heat high temperature circuit	27.547	MBTU/hr
Intercooler inlet high water temperature (max.)	180	°F
Intercooler coolant flow high temperatue circuit (min.)	11.8	gpm

3.3 Mixture cooling water circuit - low temperature (LT)

Coolant requirements in accordance with 'TA-001 Coolant'		
Intercooler heat low temperature circuit	20.347	MBTU/hr
Intercooler inlet low water temperature (max.)	108	°F
Intercooler outlet low water temperature (max.)	113	°F
Intercooler coolant flow low temperature circuit (min.)	8.8	gpm
Safety valve	44	psi

* Up to / from module interface

** Heating water supply temperature in partial load operation < 90°C

4. Exhaust system

Exhaust gas temperature after turbo charger	750	°F (3)
Exhaust temperature after exhaust heat exchanger	356	°F
exhaust gas volume flow wet	241	SCFM (6)
exhaust gas volume flow dry	211	SCFM (6)
exhaust gas mass flow wet	1169	lbs/hr
exhaust gas mass flow dry	1072	lbs/hr
Exhaust back pressure downstream of turbine max.	0.73	psig
Pressure reserve approx. (with catalytic converter) *	0.57 (0.48)	psig
Exhaust outlet noise **	133	dB (7)

5 Ventilation

Radiation heat of engine and generator (approx.)	76.344	MBTU/hr
Supply air volume flow min. (at Δt = 15 K)	2892	SCFM

6 Operating fluids

Lubricating oil approvals, see 'TA-003 Lubricating oil'		
Lubrication oil consumption (max.)	1.25	g/kWh
Filling capacity lubricant (max.)	8.98	gallons
Lubricating oil filling tank fill capacity ***	9.25	gallons
Lubricating oil volume extension tank (optional)	18.49	gallons
Coolant approvals, see 'TA-001 Coolant'		

7 Electronics and software

Generator Protection Relay	Deif GPC 3 | optional redundant Relay SEL 700GT	
Touchscreen display	10	"
Protection class Control cabinet	Type 12	
Protection class Power switch cabinet	Type 1	
Switch cabinet environmental temperature	32 - 95	°F
Switch cabinet relative air humidity (max.)	65	%

* From module interface (exhaust heat exchanger / catalytic converter in standard version and new condition)

** Total sound power level at full engine load in accordance with DIN 45635-11 Annex A

*** Filling tank omitted with installation of a lubricating oil volume auxiliary tank

8 Interfaces

8.1 Dimensions and weights

(Figures may differ)

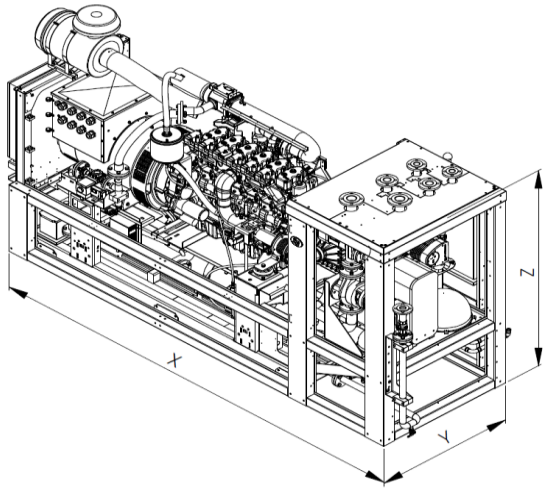

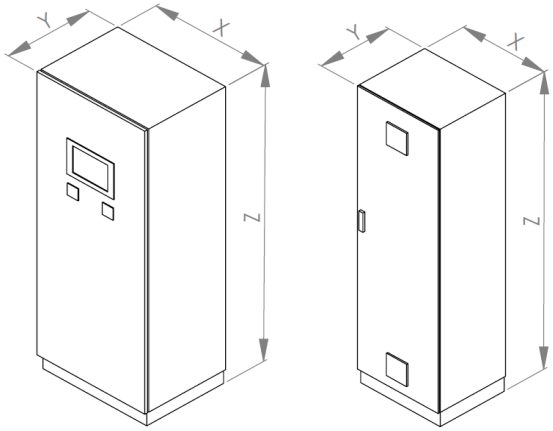

Length Module	X	121.65	in
Width Module	Y	46.06	in
Height Module	Z	68.90	in
Weight Module		7496	lbs
Weight Module with sound enclosure (optional)		8774	lbs
Powder-coated CHP frame		RAL 6002	

Width Control cabinet	X	39.37	in
Depth Control cabinet	Y	23.62	in
Height Control cabinet	Z	82.68	in
Weight Control cabinet		441	lbs
Control cabinet powder coated		RAL 7035	

Width Power switch cabinet	X	23.62	in
Depth Power switch cabinet	Y	19.69	in
Height Power switch cabinet	Z	78.74	in
Weight Power switch cabinet		331	lbs
Power switch cabinet powder coated		RAL 7035	

8.2 Mechanical Connections

Interface Gas	40 / 10	DN / PN
Interface Exhaust	100 / 10	DN / PN
Interface Heating circuit	40 / 16	DN / PN
Interface Emergency cooling circuit	50 / 16	DN / PN
Interface Mixture cooling circuit LT	25 / 16	DN / PN

8.3 Electrical connections / utility interface

Grid connection with pre-fuse (customer-provided)	480 V / 60 Hz	
Grid system	Y	
Short-circuit proof Icc (max.)	50	kA

8.4 Data interfaces

Remote maintenance access (optional) *	DSL / UMTS (SIM)	
Interfaces / Data interfaces (optional):	-	Profibus
	-	Profinet
	-	Modbus RTU
	-	Modbus TCP
	-	Ethernet IP
	-	Hardware contacts

* Access for remote maintenance must be provided by the customer

9 Technical boundary conditions

Unless otherwise specified, all data is based on full engine load with the respective indicated media temperatures and subject to technical improvements. The generator output measured at the generator terminals serves as the basis for the delivered electrical power. All power and efficiency specifications are gross specifications. The fuel gas quality must conform to the specifications of 'TA-004 Gas'. The operating fluids and plant system layout must conform to the 'Technical instructions' of 2G.

(1) Performance conditions in accordance with DIN ISO 3046. Tolerance for specific fuel use amounts to + 5% of nominal performance. Efficiency specifications are based on an engine in new condition. An abatement in efficiency over the service life is reduced with observance of the maintenance requirements.

(2) The tolerance for usable heat output is +/- 8 % under normal load.

(3) The tolerance for the exhaust temperature is +/- 8 %.

(4) Corresponding to a residual oxygen concentration in the exhaust of 15 %.

(5) Electrical generator terminal power at cos φ = 1.0

(6) Volume specifications for normal status:

Pressure	14.69	psig
Temperature	32	°F

(7) Standard deviation of reproducibility 4 dB in accordance with DIN EN ISO 3746

(8) Assumed gas composition (VOC calculated as NMHC):
CH_4=60 %, CO_2=40 %

Power specifications in this document relate to standard reference conditions.

Standard reference conditions in accordance with DIN ISO 3046-1:

Air pressure	14.50	psig
Air temperature	77	°F
Relative air humidity	30	%

Power reduction

Power reduction due to installation at altitude > 958ft a.s.l. and/or air suction temperature > 77°F shall be determined specifically for each project according "TI-049 Load reduction".

Technical specification

patruus 190 BG

(formerly 2G-KWK-190 BG)

Design:

190 kW el.

480 V / 60 Hz

biogas (60% CH4, 40% CO2)

Calorific Value = 578 BTU/ft³

NOx < 1.0 g/BHP-h

Exhaust cooling to 356 °F

1. Genset	3
1.1 Engine	3
1.2 Generator (utility planning data)	4
2 Mixture composition	4
2.1 Combustion air	4
2.2 Fuel	5
3 Integrated heat extraction	5
3.1 Customer Heat Recovery Circuit	5
3.2 Engine circuit	5
3.3 Mixture cooling water circuit - low temperature (LT)	5
4. Exhaust system	6
5 Ventilation	6
6 Operating fluids	6
7 Electronics and software	6
8 Interfaces	7
8.1 Dimensions and weights	7
8.2 Mechanical Connections	8
8.3 Electrical connections / utility interface	8
8.4 Data interfaces	8
9 Technical boundary conditions	9

Subject to technical changes!

Note: Figure on cover page may differ

1. Genset

	50 %	75 %	100 %	Load
Electrical power	95	143	190	kW (5)
Useful thermal power	476.530	633.049	800.896	MBTU/hr (2)
Fuel cosumption	1005.337	1367.276	1763.160	MBTU/hr (1)
Efficiency Electrical	32.2	35.6	36.8	% (1)
Efficiency Thermal	47.4	46.3	45.4	% (1), (2)
Efficiency Combined (el. + th.)	79.6	81.9	82.2	% (1), (2)

	NOx *	CO	VOC (8)	
Exh. emissions without catalytic converter	< 1.0	< 2.4	< 0.7	g/BHP-h
	< 91	< 300		ppm (4),(6)
Exh. emissions with catalytic converter	< 1.0	< 0.7	< 0.7	g/BHP-h
	< 91	< 90		ppm (4),(6)

Engine surface noise **	107	dB(A) (7)
Engine surface noise with sound enclosure (optional) ***	70	dB(A) (7)

1.1 Engine

Engine manufacturer	MAN	
Engine type	E 2876 LE 302	
Type	row	
No. of cylinders	6	
Operating method	4-stroke	
Engine displacement	12820	ccm
Bore	5.04	in
Stroke	6.54	in
RPM	1800	1/min
ISO standard power (mech.)	267	bhp
compression ratio	11,0 : 1	
average effective pressure	150.1	psi
average piston speed	32.7	ft/s
body of balance wheel	SAE 1	
Direction of rotation (based on balance wheel)	left	
tooth rim with number of teeth	160	
Engine dead weight	2161	lbs
Mixture cooling to	122	°F

* Reffered to MAN data sheet

** Total sound power level at full engine load in accordance with DIN EN ISO 3746

*** Average sound pressure level under open area conditions at distance of 1 m in accordance with DIN 45635
An increased noise load must be taken into account with fresh air intake from the installation room.

1.2 Generator (utility planning data)

Manufacturer	Leroy Somer	
Type	LSA 46.3 L10/4P	
Generator type	Synchronous, directly coupled	
Voltage regualtor (AVR)	D510C	
Rated speed	1800	1/min
Frequency	60	Hz
Effective electrical power	190	kW
Apparent electrical power (cos φ 0.8)	238	kVA
Apparent electrical power (cos φ 1.0)	190	kVA
Rated generator current (cos φ 0.8)	286	A
Rated generator current (cos φ 1.0)	229	A
Rated generator voltage (± 10 %)	480	V
Subtransient reactance X"d	7.2	%
Short-circuit current Ik"3	5.01	kA
Power factor cos φ (lagging / leading)	0.8 / 0.95	
Generator circuit breaker	400	A
Additional section switch (VDE-AR-N 4105)	400	A
Efficiency (full load) at Cos φ = 1	95.5	%
Mass moment of inertia	20.88	lb · ft²
Ambient air temperature	104	°F
Stator circuit	star	
Protection class	IP 23	
Generator weight	9	lbs
Compensation	not available	
Engine startup	not available	

2 Mixture composition

2.1 Combustion air

Combustion air mass flow	1978	lbs/hr
Combustion air volume flow (25 °C, 1013 mbar)	446	SCFM

2.2 Fuel

Fuel requirements in accordance with 'TA-004 Gas'		
Reference methane number - minimum methane number	140 / 80	
Combustible mass flow	232.6	lbs/hr (1)
Combustible volume flow	50.9	SCFM (6),(1)
Gas pressure at rated load min. *	0.435	psig
Gas flow pressure at rated load max. *	1.015	psig
Gas regulation line safety pressure	7.252	psig

* At the inlet to the gas regulation line

3 Integrated heat extraction

3.1 Customer Heat Recovery Circuit

Heating water requirements in accordance with 'TA-002 Heating circuit'		
Heating water volume flow (at Δt = 15 K)	59.2	gpm
Internal pressure loss in heating circuit (approx.) *	4.35	psig
Total Head ca. *	23.45	ft
Heating water return temperature (max)	158	°F
Heating water flow temperature (max) **	194	°F
Safety valve	87.02	psi

3.2 Engine circuit

Coolant requirements in accordance with 'TA-001 Coolant'		
Jacket Water Heat	360.683	MBTU/hr
Exhaust Gas Heat up to 356°F	369.557	MBTU/hr
Engine inlet temperature (min.)	176	°F
Engine outlet temperature (max.)	190	°F
Differential inlet / outlet (max.)	10.8	°F
Jacket water flow (min.)	77.6	gpm
Jacket water flow (max.)	108.0	gpm
Operating pressure (max.)	29.0	psi
Safety valve	43.5	psi
Safety temperature limiter	230	°F
Intercooler heat high temperature circuit	70.656	MBTU/hr
Intercooler inlet high water temperature (max.)	180	°F
Intercooler coolant flow high temperatue circuit (min.)	30.4	gpm

3.3 Mixture cooling water circuit - low temperature (LT)

Coolant requirements in accordance with 'TA-001 Coolant'		
Intercooler heat low temperature circuit	60.671	MBTU/hr
Intercooler inlet low water temperature (max.)	108	°F
Intercooler outlet low water temperature (max.)	113	°F
Intercooler coolant flow low temperature circuit (min.)	26.1	gpm
Safety valve	44	psi

* Up to / from module interface

** Heating water supply temperature in partial load operation < 90°C

4. Exhaust system

Exhaust gas temperature after turbo charger	965	°F (3)
Exhaust temperature after exhaust heat exchanger	356	°F
exhaust gas volume flow wet	456	SCFM (6)
exhaust gas volume flow dry	398	SCFM (6)
exhaust gas mass flow wet	2211	lbs/hr
exhaust gas mass flow dry	2027	lbs/hr
Exhaust back pressure downstream of turbine max.	0.73	psig
Pressure reserve approx. (with catalytic converter) *	0.57 (0.46)	psig
Exhaust outlet noise **	140	dB (7)

5 Ventilation

Radiation heat of engine and generator (approx.)	117.552	MBTU/hr
Supply air volume flow min. (at Δt = 15 K)	4536	SCFM

6 Operating fluids

Lubricating oil approvals, see 'TA-003 Lubricating oil'		
Lubrication oil consumption (max.)	0.79	g/kWh
Filling capacity lubricant (max.)	18.49	gallons
Lubricating oil filling tank fill capacity ***	9.25	gallons
Lubricating oil volume extension tank (optional)	26.42	gallons
Coolant approvals, see 'TA-001 Coolant'		

7 Electronics and software

Generator Protection Relay	Deif GPC 3 | optional redundant Relay SEL 700GT	
Touchscreen display	10	"
Protection class Control cabinet	Type 12	
Protection class Power switch cabinet	Type 1	
Switch cabinet environmental temperature	32 - 95	°F
Switch cabinet relative air humidity (max.)	65	%

* From module interface (exhaust heat exchanger / catalytic converter in standard version and new condition)

** Total sound power level at full engine load in accordance with DIN 45635-11 Annex A

*** Filling tank omitted with installation of a lubricating oil volume auxiliary tank

8 Interfaces

8.1 Dimensions and weights

(Figures may differ)

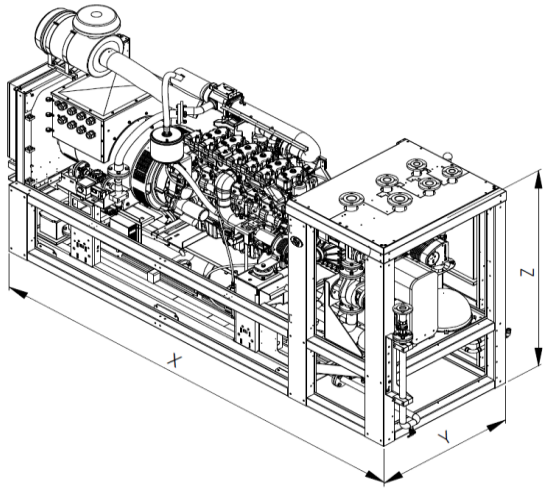

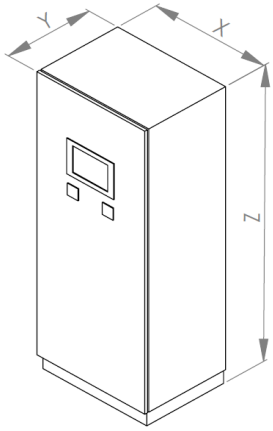

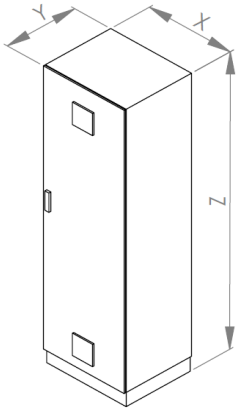

Length Module	X	157.09	in
Width Module	Y	51.18	in
Height Module	Z	78.74	in
Weight Module		9546	lbs
Weight Module with sound enclosure (optional)		11310	lbs
Powder-coated CHP frame		RAL 6002	

Width Control cabinet	X	39.37	in
Depth Control cabinet	Y	23.62	in
Height Control cabinet	Z	82.68	in
Weight Control cabinet		441	lbs
Control cabinet powder coated		RAL 7035	

Width Power switch cabinet	X	23.62	in
Depth Power switch cabinet	Y	19.69	in
Height Power switch cabinet	Z	78.74	in
Weight Power switch cabinet		331	lbs
Power switch cabinet powder coated		RAL 7035	

8.2 Mechanical Connections

Interface Gas	50 / 10	DN / PN
Interface Exhaust	150 / 10	DN / PN
Interface Heating circuit	50 / 16	DN / PN
Interface Emergency cooling circuit	65 / 16	DN / PN
Interface Mixture cooling circuit LT	40 / 16	DN / PN

8.3 Electrical connections / utility interface

Grid connection with pre-fuse (customer-provided)	480 V / 60 Hz	
Grid system	Y	
Short-circuit proof Icc (max.)	50	kA

8.4 Data interfaces

Remote maintenance access (optional) *	DSL / UMTS (SIM)	
Interfaces / Data interfaces (optional):	-	Profibus
	-	Profinet
	-	Modbus RTU
	-	Modbus TCP
	-	Ethernet IP
	-	Hardware contacts

* Access for remote maintenance must be provided by the customer

9 Technical boundary conditions

Unless otherwise specified, all data is based on full engine load with the respective indicated media temperatures and subject to technical improvements. The generator output measured at the generator terminals serves as the basis for the delivered electrical power. All power and efficiency specifications are gross specifications. The fuel gas quality must conform to the specifications of 'TA-004 Gas'. The operating fluids and plant system layout must conform to the 'Technical instructions' of 2G.

(1) Performance conditions in accordance with DIN ISO 3046. Tolerance for specific fuel use amounts to + 5% of nominal performance. Efficiency specifications are based on an engine in new condition. An abatement in efficiency over the service life is reduced with observance of the maintenance requirements.

(2) The tolerance for usable heat output is +/- 8 % under normal load.

(3) The tolerance for the exhaust temperature is +/- 8 %.

(4) Corresponding to a residual oxygen concentration in the exhaust of 15 %.

(5) Electrical generator terminal power at cos φ = 1.0

(6) Volume specifications for normal status:

Pressure	14.69	psig
Temperature	32	°F

(7) Standard deviation of reproducibility 4 dB in accordance with DIN EN ISO 3746

(8) Assumed gas composition (VOC calculated as NMHC):
CH4=60 %, CO2=40 %

Power specifications in this document relate to standard reference conditions.

Standard reference conditions in accordance with DIN ISO 3046-1:

Air pressure	14.50	psig
Air temperature	77	°F
Relative air humidity	30	%

Power reduction

Power reduction due to installation at altitude > 958ft a.s.l. and/or air suction temperature > 77°F shall be determined specifically for each project according "TI-049 Load reduction".

Technical specification

patruus 250 BG

(formerly 2G-KWK-250 BG)

Design:

250 kW el.

480 V / 60 Hz

biogas (60% CH4, 40% CO2)

Calorific Value = 578 BTU/ft³

NOx < 1.0 g/BHP-h

Exhaust cooling to 356 °F

1. Genset	3
1.1 Engine	3
1.2 Generator (utility planning data)	4
2 Mixture composition	4
2.1 Combustion air	4
2.2 Fuel	5
3 Integrated heat extraction	5
3.1 Customer Heat Recovery Circuit	5
3.2 Engine circuit	5
3.3 Mixture cooling water circuit - low temperature (LT)	5
4. Exhaust system	6
5 Ventilation	6
6 Operating fluids	6
7 Electronics and software	6
8 Interfaces	7
8.1 Dimensions and weights	7
8.2 Mechanical Connections	8
8.3 Electrical connections / utility interface	8
8.4 Data interfaces	8
9 Technical boundary conditions	9

Subject to technical changes!

Note: Figure on cover page may differ

1. Genset

	50 %	75 %	100 %	Load
Electrical power	125	188	250	kW (5)
Useful thermal power	644.129	861.448	1088.970	MBTU/hr (2)
Fuel cosumption	1296.034	1779.851	2342.932	MBTU/hr (1)
Efficiency Electrical	32.9	35.9	36.4	% (1)
Efficiency Thermal	49.7	48.4	46.5	% (1), (2)
Efficiency Combined (el. + th.)	82.6	84.3	82.9	% (1), (2)

	NOx *	CO	VOC (8)	
Exh. emissions without catalytic converter	< 1.0	< 2.4	< 0.7	g/BHP-h
	< 91	< 300		ppm (4),(6)
Exh. emissions with catalytic converter	< 1.0	< 0.7	< 0.7	g/BHP-h
	< 91	< 90		ppm (4),(6)

Engine surface noise **	106	dB(A) (7)
Engine surface noise with sound enclosure (optional) ***	70	dB(A) (7)

1.1 Engine

Engine manufacturer	MAN	
Engine type	E 2848 LE 322	
Type	V engine	
No. of cylinders	8	
Operating method	4-stroke	
Engine displacement	14620	ccm
Bore	5.04	in
Stroke	5.59	in
RPM	1800	1/min
ISO standard power (mech.)	350	bhp
compression ratio	12,0 : 1	
average effective pressure	172.4	psi
average piston speed	28.0	ft/s
body of balance wheel	SAE 1	
Direction of rotation (based on balance wheel)	left	
tooth rim with number of teeth	160	
Engine dead weight	2319	lbs
Mixture cooling to	122	°F

* Reffered to MAN data sheet

** Total sound power level at full engine load in accordance with DIN EN ISO 3746

*** Average sound pressure level under open area conditions at distance of 1 m in accordance with DIN 45635
An increased noise load must be taken into account with fresh air intake from the installation room.

1.2 Generator (utility planning data)

Manufacturer	Leroy Somer	
Type	LSA 46.3 L10/4P	
Generator type	Synchronous, directly coupled	
Voltage regualtor (AVR)	D510C	
Rated speed	1800	1/min
Frequency	60	Hz
Effective electrical power	250	kW
Apparent electrical power (cos φ 0.8)	313	kVA
Apparent electrical power (cos φ 1.0)	250	kVA
Rated generator current (cos φ 0.8)	376	A
Rated generator current (cos φ 1.0)	301	A
Rated generator voltage (± 10 %)	480	V
Subtransient reactance X"d	9.4	%
Short-circuit current Ik"3	4.95	kA
Power factor cos φ (lagging / leading)	0.8 / 0.95	
Generator circuit breaker	630	A
Additional section switch (VDE-AR-N 4105)	630	A
Efficiency (full load) at Cos φ = 1	95.9	%
Mass moment of inertia	92.79	lb · ft²
Ambient air temperature	104	°F
Stator circuit	star	
Protection class	IP 23	
Generator weight	1958	lbs
Compensation	not available	
Engine startup	not available	

2 Mixture composition

2.1 Combustion air

Combustion air mass flow	2733	lbs/hr
Combustion air volume flow (25 °C, 1013 mbar)	616	SCFM

2.2 Fuel

Fuel requirements in accordance with 'TA-004 Gas'		
Reference methane number - minimum methane number	140 / 80	
Combustible mass flow	309.1	lbs/hr (1)
Combustible volume flow	67.6	SCFM (6),(1)
Gas pressure at rated load min. *	0.435	psig
Gas flow pressure at rated load max. *	1.015	psig
Gas regulation line safety pressure	7.252	psig

* At the inlet to the gas regulation line

3 Integrated heat extraction

3.1 Customer Heat Recovery Circuit

Heating water requirements in accordance with 'TA-002 Heating circuit'		
Heating water volume flow (at Δt = 15 K)	80.5	gpm
Internal pressure loss in heating circuit (approx.) *	4.35	psig
Total Head ca. *	16.75	ft
Heating water return temperature (max)	158	°F
Heating water flow temperature (max) **	194	°F
Safety valve	87.02	psi

3.2 Engine circuit

Coolant requirements in accordance with 'TA-001 Coolant'		
Jacket Water Heat	554.975	MBTU/hr
Exhaust Gas Heat up to 356°F	448.251	MBTU/hr
Engine inlet temperature (min.)	176	°F
Engine outlet temperature (max.)	190	°F
Differential inlet / outlet (max.)	10.8	°F
Jacket water flow (min.)	119.4	gpm
Jacket water flow (max.)	156.2	gpm
Operating pressure (max.)	43.5	psi
Safety valve	43.5	psi
Safety temperature limiter	230	°F
Intercooler heat high temperature circuit	85.745	MBTU/hr
Intercooler inlet high water temperature (max.)	180	°F
Intercooler coolant flow high temperatue circuit (min.)	36.9	gpm

3.3 Mixture cooling water circuit - low temperature (LT)

Coolant requirements in accordance with 'TA-001 Coolant'		
Intercooler heat low temperature circuit	40.260	MBTU/hr
Intercooler inlet low water temperature (max.)	108	°F
Intercooler outlet low water temperature (max.)	113	°F
Intercooler coolant flow low temperature circuit (min.)	17.3	gpm
Safety valve	44	psi

* Up to / from module interface

** Heating water supply temperature in partial load operation < 90°C

4. Exhaust system

Exhaust gas temperature after turbo charger	897	°F (3)
Exhaust temperature after exhaust heat exchanger	356	°F
exhaust gas volume flow wet	627	SCFM (6)
exhaust gas volume flow dry	550	SCFM (6)
exhaust gas mass flow wet	3042	lbs/hr
exhaust gas mass flow dry	2797	lbs/hr
Exhaust back pressure downstream of turbine max.	0.73	psig
Pressure reserve approx. (with catalytic converter) *	0.49 (0.42)	psig
Exhaust outlet noise **	134	dB (7)

5 Ventilation

Radiation heat of engine and generator (approx.)	143.952	MBTU/hr
Supply air volume flow min. (at Δt = 15 K)	5624	SCFM

6 Operating fluids

Lubricating oil approvals, see 'TA-003 Lubricating oil'		
Lubrication oil consumption (max.)	0.70	g/kWh
Filling capacity lubricant (max.)	18.49	gallons
Lubricating oil filling tank fill capacity ***	9.25	gallons
Lubricating oil volume extension tank (optional)	26.42	gallons
Coolant approvals, see 'TA-001 Coolant'		

7 Electronics and software

Generator Protection Relay	Deif GPC 3 | optional redundant Relay SEL 700GT	
Touchscreen display	10	"
Protection class Control cabinet	Type 12	
Protection class Power switch cabinet	Type 1	
Switch cabinet environmental temperature	32 - 95	°F
Switch cabinet relative air humidity (max.)	65	%

* From module interface (exhaust heat exchanger / catalytic converter in standard version and new condition)

** Total sound power level at full engine load in accordance with DIN 45635-11 Annex A

*** Filling tank omitted with installation of a lubricating oil volume auxiliary tank

8 Interfaces

8.1 Dimensions and weights

(Figures may differ)

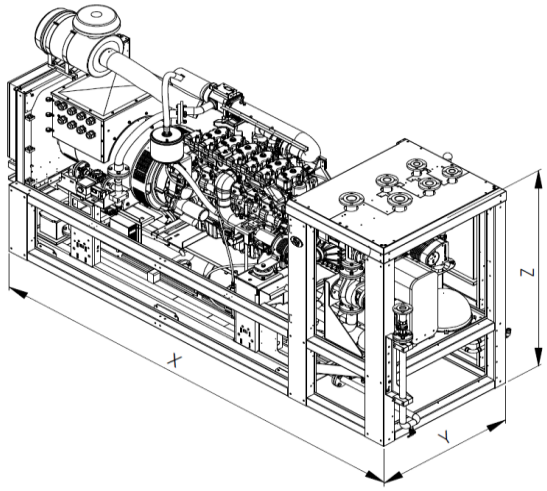

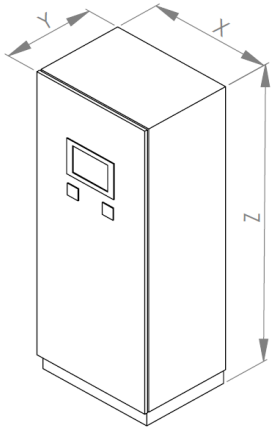

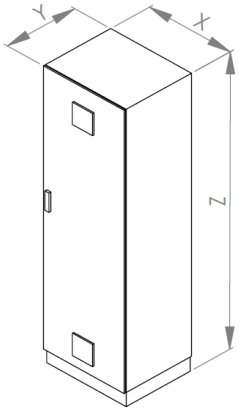

Length Module	X	141.89	in
Width Module	Y	59.06	in
Height Module	Z	86.61	in
Weight Module		9546	lbs
Weight Module with sound enclosure (optional)		11420	lbs
Powder-coated CHP frame		RAL 6002	

Width Control cabinet	X	39.37	in
Depth Control cabinet	Y	23.62	in
Height Control cabinet	Z	82.68	in
Weight Control cabinet		441	lbs
Control cabinet powder coated		RAL 7035	

Width Power switch cabinet	X	23.62	in
Depth Power switch cabinet	Y	19.69	in
Height Power switch cabinet	Z	78.74	in
Weight Power switch cabinet		331	lbs
Power switch cabinet powder coated		RAL 7035	

8.2 Mechanical Connections

Interface Gas	65 / 10	DN / PN
Interface Exhaust	150 / 10	DN / PN
Interface Heating circuit	65 / 16	DN / PN
Interface Emergency cooling circuit	80 / 16	DN / PN
Interface Mixture cooling circuit LT	40 / 16	DN / PN

8.3 Electrical connections / utility interface

Grid connection with pre-fuse (customer-provided)	480 V / 60 Hz	
Grid system	Y	
Short-circuit proof Icc (max.)	50	kA

8.4 Data interfaces

Remote maintenance access (optional) *	DSL / UMTS (SIM)	
Interfaces / Data interfaces (optional):	-	Profibus
	-	Profinet
	-	Modbus RTU
	-	Modbus TCP
	-	Ethernet IP
	-	Hardware contacts

* Access for remote maintenance must be provided by the customer

9 Technical boundary conditions

Unless otherwise specified, all data is based on full engine load with the respective indicated media temperatures and subject to technical improvements. The generator output measured at the generator terminals serves as the basis for the delivered electrical power. All power and efficiency specifications are gross specifications. The fuel gas quality must conform to the specifications of 'TA-004 Gas'. The operating fluids and plant system layout must conform to the 'Technical instructions' of 2G.

(1) Performance conditions in accordance with DIN ISO 3046. Tolerance for specific fuel use amounts to + 5% of nominal performance. Efficiency specifications are based on an engine in new condition. An abatement in efficiency over the service life is reduced with observance of the maintenance requirements.

(2) The tolerance for usable heat output is +/- 8 % under normal load.

(3) The tolerance for the exhaust temperature is +/- 8 %.

(4) Corresponding to a residual oxygen concentration in the exhaust of 15 %.

(5) Electrical generator terminal power at cos φ = 1.0

(6) Volume specifications for normal status:

Pressure	14.69	psig
Temperature	32	°F

(7) Standard deviation of reproducibility 4 dB in accordance with DIN EN ISO 3746

(8) Assumed gas composition (VOC calculated as NMHC):
CH_4=60 %, CO_2=40 %

Power specifications in this document relate to standard reference conditions.

Standard reference conditions in accordance with DIN ISO 3046-1:

Air pressure	14.50	psig
Air temperature	77	°F
Relative air humidity	30	%

Power reduction

Power reduction due to installation at altitude > 958ft a.s.l. and/or air suction temperature > 77°F shall be determined specifically for each project according "TI-049 Load reduction".

Technical specification

patruus 370 BG

(formerly 2G-KWK-370 BG)

Design:

370 kW el.

480 V / 60 Hz

biogas (60% CH4, 40% CO2)

Calorific Value = 578 BTU/ft³

NOx < 1.0 g/BHP-h

Exhaust cooling to 356 °F

1. Genset	3
1.1 Engine	3
1.2 Generator (utility planning data)	4
2 Mixture composition	4
2.1 Combustion air	4
2.2 Fuel	5
3 Integrated heat extraction	5
3.1 Customer Heat Recovery Circuit	5
3.2 Engine circuit	5
3.3 Mixture cooling water circuit - low temperature (LT)	5
4. Exhaust system	6
5 Ventilation	6
6 Operating fluids	6
7 Electronics and software	6
8 Interfaces	7
8.1 Dimensions and weights	7
8.2 Mechanical Connections	8
8.3 Electrical connections / utility interface	8
8.4 Data interfaces	8
9 Technical boundary conditions	9

Subject to technical changes!

Note: Figure on cover page may differ

1. Genset

	50 %	75 %	100 %	Load
Electrical power	185	278	370	kW (5)
Useful thermal power	965.567	1273.962	1613.198	MBTU/hr (2)
Fuel cosumption	1882.197	2637.603	3407.458	MBTU/hr (1)
Efficiency Electrical	33.5	35.9	37.1	% (1)
Efficiency Thermal	51.3	48.3	47.3	% (1), (2)
Efficiency Combined (el. + th.)	84.8	84.2	84.4	% (1), (2)

	NOx *	CO	VOC (8)	
Exh. emissions without catalytic converter	< 1.0	< 2.3	< 0.7	g/BHP-h
	< 91	< 300		ppm (4),(6)
Exh. emissions with catalytic converter	< 1.0	< 0.7	< 0.7	g/BHP-h
	< 91	< 90		ppm (4),(6)

Engine surface noise **	108	dB(A) (7)
Engine surface noise with sound enclosure (optional) ***	70	dB(A) (7)

1.1 Engine

Engine manufacturer	MAN	
Engine type	E 2842 LE 322	
Type	V engine	
No. of cylinders	12	
Operating method	4-stroke	
Engine displacement	21930	ccm
Bore	5.04	in
Stroke	5.59	in
RPM	1800	1/min
ISO standard power (mech.)	517	bhp
compression ratio	12,0 : 1	
average effective pressure	170.1	psi
average piston speed	28.0	ft/s
body of balance wheel	SAE 1	
Direction of rotation (based on balance wheel)	left	
tooth rim with number of teeth	160	
Engine dead weight	3131	lbs
Mixture cooling to	122	°F

* Reffered to MAN data sheet

** Total sound power level at full engine load in accordance with DIN EN ISO 3746

*** Average sound pressure level under open area conditions at distance of 1 m in accordance with DIN 45635
An increased noise load must be taken into account with fresh air intake from the installation room.

1.2 Generator (utility planning data)

Manufacturer	Leroy Somer	
Type	LSA 47.2 M7/4P	
Generator type	Synchronous, directly coupled	
Voltage regualtor (AVR)	D510C	
Rated speed	1800	1/min
Frequency	60	Hz
Effective electrical power	370	kW
Apparent electrical power (cos φ 0.8)	463	kVA
Apparent electrical power (cos φ 1.0)	370	kVA
Rated generator current (cos φ 0.8)	556	A
Rated generator current (cos φ 1.0)	445	A
Rated generator voltage (± 10 %)	480	V
Subtransient reactance X"d	12.3	%
Short-circuit current Ik"3	6.47	kA
Power factor cos φ (lagging / leading)	0.8 / 0.95	
Generator circuit breaker	800	A
Additional section switch (VDE-AR-N 4105)	800	A
Efficiency (full load) at Cos φ = 1	95.9	%
Mass moment of inertia	175.84	lb · ft²
Ambient air temperature	104	°F
Stator circuit	star	
Protection class	IP 23	
Generator weight	2762	lbs
Compensation	not available	
Engine startup	not available	

2 Mixture composition

2.1 Combustion air

Combustion air mass flow	4030	lbs/hr
Combustion air volume flow (25 °C, 1013 mbar)	909	SCFM

2.2 Fuel

Fuel requirements in accordance with 'TA-004 Gas'		
Reference methane number - minimum methane number	140 / 80	
Combustible mass flow	449.6	lbs/hr (1)
Combustible volume flow	98.3	SCFM (6),(1)
Gas pressure at rated load min. *	0.435	psig
Gas flow pressure at rated load max. *	1.015	psig
Gas regulation line safety pressure	7.252	psig

* At the inlet to the gas regulation line

3 Integrated heat extraction

3.1 Customer Heat Recovery Circuit

Heating water requirements in accordance with 'TA-002 Heating circuit'		
Heating water volume flow (at Δt = 15 K)	119.2	gpm
Internal pressure loss in heating circuit (approx.) *	4.35	psig
Total Head ca. *	28.48	ft
Heating water return temperature (max)	158	°F
Heating water flow temperature (max) **	194	°F
Safety valve	87.02	psi

3.2 Engine circuit

Coolant requirements in accordance with 'TA-001 Coolant'		
Jacket Water Heat	798.553	MBTU/hr
Exhaust Gas Heat up to 356°F	679.692	MBTU/hr
Engine inlet temperature (min.)	176	°F
Engine outlet temperature (max.)	190	°F
Differential inlet / outlet (max.)	10.8	°F
Jacket water flow (min.)	171.7	gpm
Jacket water flow (max.)	229.8	gpm
Operating pressure (max.)	43.5	psi
Safety valve	43.5	psi
Safety temperature limiter	230	°F
Intercooler heat high temperature circuit	134.954	MBTU/hr
Intercooler inlet high water temperature (max.)	180	°F
Intercooler coolant flow high temperatue circuit (min.)	58.0	gpm

3.3 Mixture cooling water circuit - low temperature (LT)

Coolant requirements in accordance with 'TA-001 Coolant'		
Intercooler heat low temperature circuit	64.871	MBTU/hr
Intercooler inlet low water temperature (max.)	108	°F
Intercooler outlet low water temperature (max.)	113	°F
Intercooler coolant flow low temperature circuit (min.)	27.9	gpm
Safety valve	44	psi

* Up to / from module interface

** Heating water supply temperature in partial load operation < 90°C

4. Exhaust system

Exhaust gas temperature after turbo charger	913	°F (3)
Exhaust temperature after exhaust heat exchanger	356	°F
exhaust gas volume flow wet	923	SCFM (6)
exhaust gas volume flow dry	812	SCFM (6)
exhaust gas mass flow wet	4480	lbs/hr
exhaust gas mass flow dry	4124	lbs/hr
Exhaust back pressure downstream of turbine max.	0.73	psig
Pressure reserve approx. (with catalytic converter) *	0.51 (0.39)	psig
Exhaust outlet noise **	123	dB (7)

5 Ventilation

Radiation heat of engine and generator (approx.)	219.532	MBTU/hr
Supply air volume flow min. (at Δt = 15 K)	8546	SCFM

6 Operating fluids

Lubricating oil approvals, see 'TA-003 Lubricating oil'		
Lubrication oil consumption (max.)	0.54	g/kWh
Filling capacity lubricant (max.)	23.78	gallons
Lubricating oil filling tank fill capacity ***	9.25	gallons
Lubricating oil volume extension tank (optional)	31.70	gallons
Coolant approvals, see 'TA-001 Coolant'		

7 Electronics and software

Generator Protection Relay	Deif GPC 3 | optional redundant Relay SEL 700GT	
Touchscreen display	10	"
Protection class Control cabinet	Type 12	
Protection class Power switch cabinet	Type 1	
Switch cabinet environmental temperature	32 - 95	°F
Switch cabinet relative air humidity (max.)	65	%

* From module interface (exhaust heat exchanger / catalytic converter in standard version and new condition)

** Total sound power level at full engine load in accordance with DIN 45635-11 Annex A

*** Filling tank omitted with installation of a lubricating oil volume auxiliary tank

8 Interfaces

8.1 Dimensions and weights

(Figures may differ)

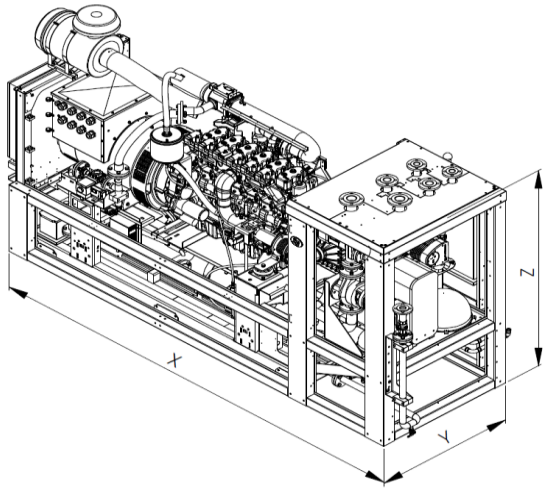

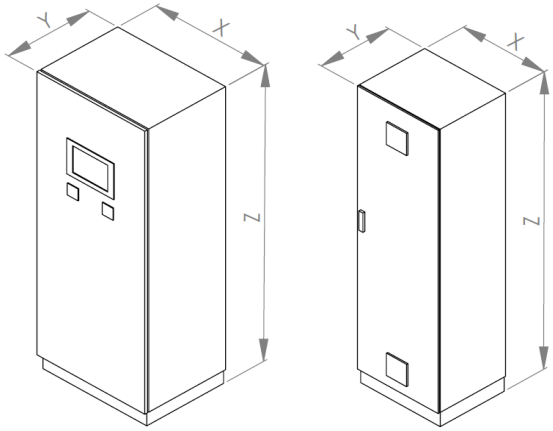

Length Module	X	155.12	in
Width Module	Y	59.06	in
Height Module	Z	86.61	in
Weight Module		12368	lbs
Weight Module with sound enclosure (optional)		14352	lbs
Powder-coated CHP frame		RAL 6002	

Width Control cabinet	X	39.37	in
Depth Control cabinet	Y	23.62	in
Height Control cabinet	Z	82.68	in
Weight Control cabinet		441	lbs
Control cabinet powder coated		RAL 7035	

Width Power switch cabinet	X	23.62	in
Depth Power switch cabinet	Y	19.69	in
Height Power switch cabinet	Z	78.74	in
Weight Power switch cabinet		331	lbs
Power switch cabinet powder coated		RAL 7035	

8.2 Mechanical Connections

Interface Gas	80 /10	DN / PN
Interface Exhaust	200 / 10	DN / PN
Interface Heating circuit	65 / 16	DN / PN
Interface Emergency cooling circuit	80 / 16	DN / PN
Interface Mixture cooling circuit LT	40 / 16	DN / PN

8.3 Electrical connections / utility interface

Grid connection with pre-fuse (customer-provided)	480 V / 60 Hz	
Grid system	Y	
Short-circuit proof Icc (max.)	50	kA

8.4 Data interfaces

Remote maintenance access (optional) *	DSL / UMTS (SIM)	
Interfaces / Data interfaces (optional):	-	Profibus
	-	Profinet
	-	Modbus RTU
	-	Modbus TCP
	-	Ethernet IP
	-	Hardware contacts

* Access for remote maintenance must be provided by the customer

9 Technical boundary conditions

Unless otherwise specified, all data is based on full engine load with the respective indicated media temperatures and subject to technical improvements. The generator output measured at the generator terminals serves as the basis for the delivered electrical power. All power and efficiency specifications are gross specifications. The fuel gas quality must conform to the specifications of 'TA-004 Gas'. The operating fluids and plant system layout must conform to the 'Technical instructions' of 2G.

(1) Performance conditions in accordance with DIN ISO 3046. Tolerance for specific fuel use amounts to + 5% of nominal performance. Efficiency specifications are based on an engine in new condition. An abatement in efficiency over the service life is reduced with observance of the maintenance requirements.

(2) The tolerance for usable heat output is +/- 8 % under normal load.

(3) The tolerance for the exhaust temperature is +/- 8 %.

(4) Corresponding to a residual oxygen concentration in the exhaust of 15 %.

(5) Electrical generator terminal power at cos φ = 1.0

(6) Volume specifications for normal status:

Pressure	14.69	psig
Temperature	32	°F

(7) Standard deviation of reproducibility 4 dB in accordance with DIN EN ISO 3746

(8) Assumed gas composition (VOC calculated as NMHC):
CH4=60 %, CO2=40 %

Power specifications in this document relate to standard reference conditions.

Standard reference conditions in accordance with DIN ISO 3046-1:

Air pressure	14.50	psig
Air temperature	77	°F
Relative air humidity	30	%

Power reduction

Power reduction due to installation at altitude > 958ft a.s.l. and/or air suction temperature > 77°F shall be determined specifically for each project according "TI-049 Load reduction".